KOUHI

3mm Through Hole Lamps

KTL039

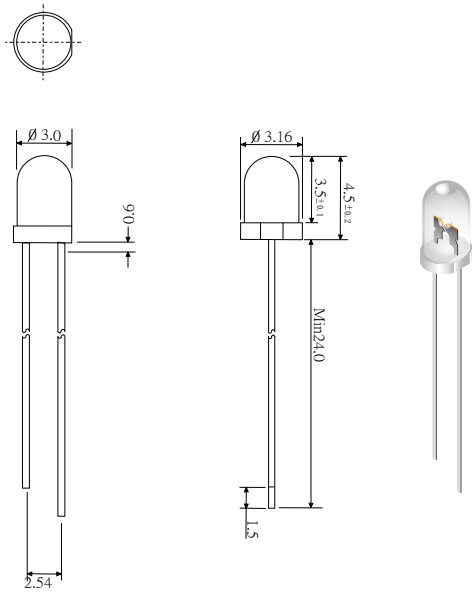

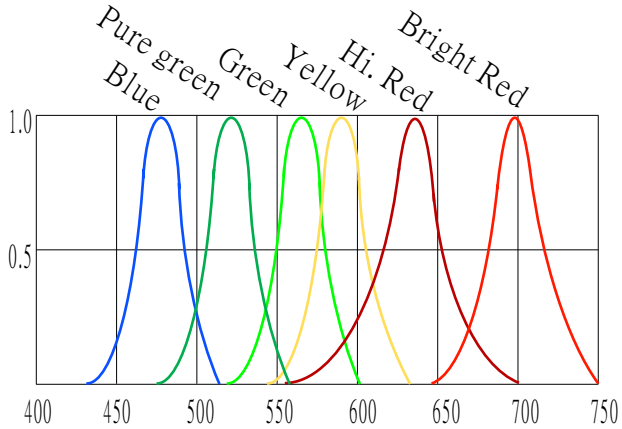

Fig. 1

Wavelength λ(nm)

Relative Intensity vs. Wavelength

Part no.	Colour	Wave Length	Lens Color (x)	Luminous Intensity (mcd)	Forward Voltage (V)	Forward Current (mA)	0°
KTL039DxI	Red	632		500	2.15	20	25
KTL039CxI	Red	632		1500	2.15	20	25
KTL039AxI-S	Red	632		2500	2.15	20	25
KTL039AxI-U	Red	632		5800	2.15	20	25
KTL039AxI-T	Red	632		7800	2.15	20	25
KTL039KxI	Green	565		500	2.15	20	25
KTL039JxI	Green	565		1500	2.15	20	25
KTL039JxI-S	Green	565		2500	2.15	20	25
KTL039JxI-U	Green	565		6000	3.60	20	25
KTL039IxI	Yellow	589		1300	2.15	20	25
KTL039IxI-S	Yellow	589		2500	2.15	20	25
KTL039IxI-U	Yellow	589		4500	2.15	20	25
KTL039IxI-T	Yellow	589	W- White	7500	2.15	20	25
KTL039FxI	Orange	621	D - Diffused	1500	2.30	20	25
KTL039FxI-S	Orange	621	C - Water Clear	2500	2.30	20	25
KTL039FxI-U	Orange	621	T - Transparent	3500	2.30	20	25
KTL039BGxI	Blue / Green	503		3500	3.60	20	25
KTL039BGxI-U	Blue / Green	503		6500	3.60	20	25
KTL039BLxI	Blue	470		500	3.60	20	25
KTL039BHxI	Blue	470		1600	3.60	20	25
KTL039BUxI	Blue	470		3500	3.60	20	25
KTL039PGxI	Pure Green	525		2500	3.60	20	25
KTL039PGxI-S	Pure Green	525		4000	3.60	20	25
KTL039PGxI-U	Pure Green	525		5500	3.60	20	25
KTL039WHxI	White	----		1300	3.60	20	25
KTL039WUxI	White	----		5200	3.60	20	25