KOUHI

5mm Through Hole-KTL058 Series

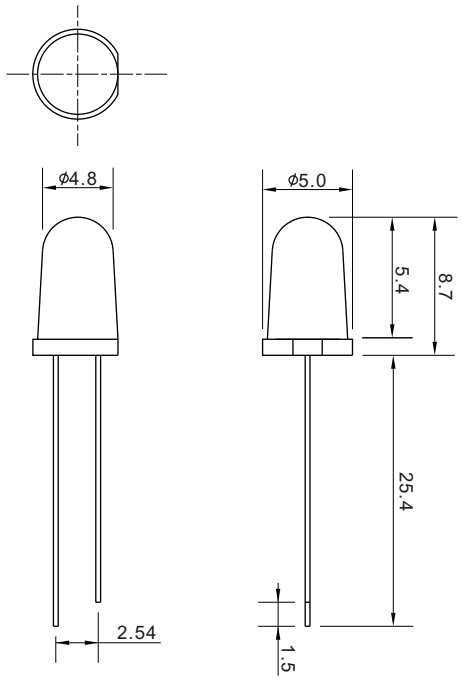

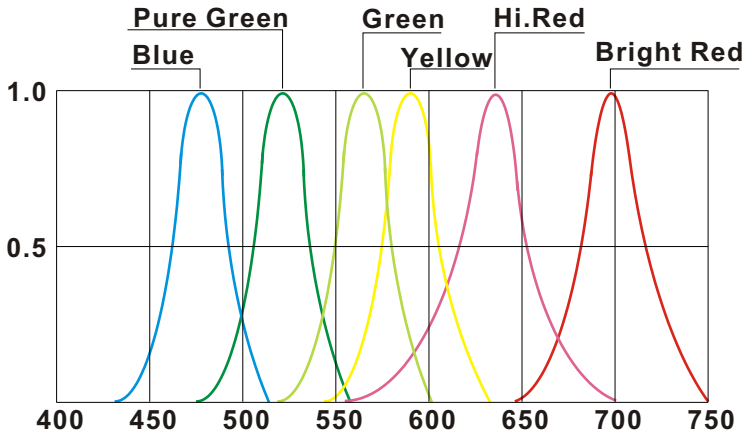

Relative Intensity vs.Wavelength

Part No.	Colour	Wave Length	Lens Colour	Luninous In tensity(mcd)	Voltage(V)	Current(mA)	Deg
KTL058DTI	Red	700	Red Transparent	10-20	1.7-2.4	20	15°
KTL058CTI	Red	645		100-300	1.7-2.4	20	15°
KTL058ATI-S	Red	630		1500-3000	1.7-2.4	20	15°
KTL058ATI-U	Red	640		3000-5000	1.7-2.4	20	15°
KTL058ATI-T	Red	623		4500-7500	1.7-2.4	20	15°
KTL058KTI	Green	572	Green Transparent	6-10	1.7-2.4	20	15°
KTL058JTI	Green	572		200-400	1.7-2.4	20	15°
KTL058JTI-S	Green	572		1500-3000	1.7-2.4	20	15°
KTL058JTI-U	Green	572		3000-5000	1.7-2.4	20	15°
KTL058ITI	Yellow	590	Yellow Transparent	2000-3500	1.7-2.4	20	15°
KTL058ITI-S	Yellow	590		3500-5000	1.7-2.4	20	15°
KTL058ITI-U	Yellow	590		5000-7000	1.7-2.4	20	15°
KTL058ITI-T	Yellow	590		7000-9000	1.7-2.4	20	15°
KTL058FTI	Orange	610	Orange Transparent	1000-2000	1.7-2.4	20	15°
KTL058FTI-S	Orange	610		3500-5500	1.7-2.4	20	15°
KTL058FTI-U	Orange	610		5500-8500	1.7-2.4	20	15°
KTL058BGTI	Blue-Green	510	Green Transparent	12000-15000	3.0-3.6	20	15°
KTL058BGTI-U	Blue-Green	510		15000-18000	3.0-3.6	20	15°
KTL058BLTI	Blue	470	Blue Transparent	4000-6000	3.0-3.6	20	15°
KTL058BHTI	Blue	470		6000-7000	3.0-3.6	20	15°
KTL058BUTI	Blue	470		7000-8000	3.0-3.6	20	15°
KTL058PGTI	Pure Green	525	Green Transparent	13000-15000	3.0-3.6	20	15°
KTL058PGTI-S	Pure Green	525		15000-17000	3.0-3.6	20	15°
KTL058PGTI-U	Pure Green	525		17000-19000	3.0-3.6	20	15°