KOUHI

10mm Through Hole-KTL100 Series

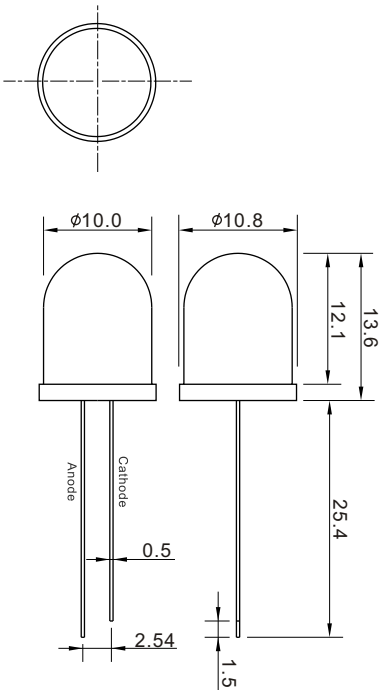

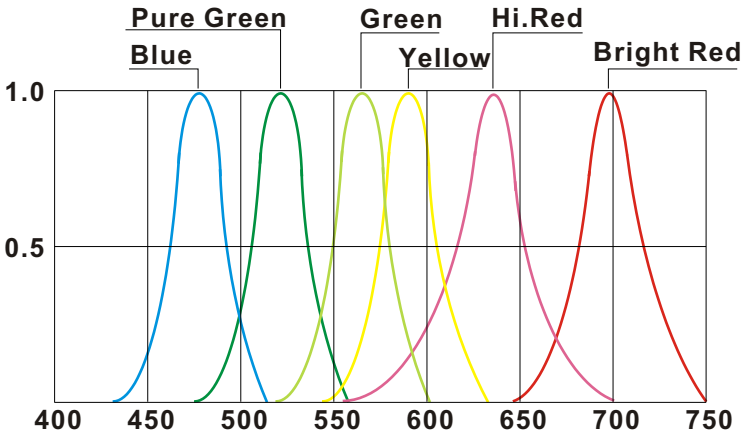

Relative Intensity vs.Wavelength

Part No.	Colour	Wave Length	Lens Colour	Luninous In tensity(mcd)	Voltage(V)	Current(mA)	Deg
KTL100DTI	Red	700	Red Transparent	10-20	1.7-2.4	20	25°
KTL100CTI	Red	645		80-200	1.7-2.4	20	25°
KTL100ATI-S	Red	630		1000-2000	1.7-2.4	20	25°
KTL100ATI-U	Red	640		2000-4000	1.7-2.4	20	25°
KTL100ATI-T	Red	623		3500-5500	1.7-2.4	20	25°
KTL100KTI	Green	572	Green Transparent	6-10	1.7-2.4	20	25°
KTL100JTI	Green	572		100-200	1.7-2.4	20	25°
KTL100JTI-S	Green	572		1000-2000	1.7-2.4	20	25°
KTL100JTI-U	Green	572		2000-3000	1.7-2.4	20	25°
KTL100ITI	Yellow	590	Yellow Transparent	1000-2000	1.8-2.1	20	25°
KTL100ITI-S	Yellow	590		1500-3000	1.8-2.1	20	25°
KTL100ITI-U	Yellow	590		3000-5000	1.8-2.1	20	25°
KTL100ITI-T	Yellow	590		5000-7000	1.8-2.1	20	25°
KTL100FTI	Orange	610	Orange Transparent	600-800	1.8-2.1	20	25°
KTL100FTI-S	Orange	610		2500-4500	1.8-2.1	20	25°
KTL100FTI-U	Orange	610		4500-6500	1.8-2.1	20	25°
KTL100BGTI	Blue-Green	510	Green Transparent	11000-13000	3.0-3.6	20	25°
KTL100BGTI-U	Blue-Green	510		13000-16000	3.0-3.6	20	25°
KTL100BLTI	Blue	470	Blue Transparent	3000-4000	3.0-3.6	20	25°
KTL100BHTI	Blue	470		4000-5000	3.0-3.6	20	25°
KTL100BUTI	Blue	470		5000-6000	3.0-3.6	20	25°
KTL100PGTI	Pure Green	525	Green Transparent	12000-14000	3.0-3.6	20	25°
KTL100PGTI-S	Pure Green	525		14000-16000	3.0-3.6	20	25°
KTL100PGTI-U	Pure Green	525		16000-18000	3.0-3.6	20	25°